CHEMICAL REACTION – 1 STAGE FLASH MIX

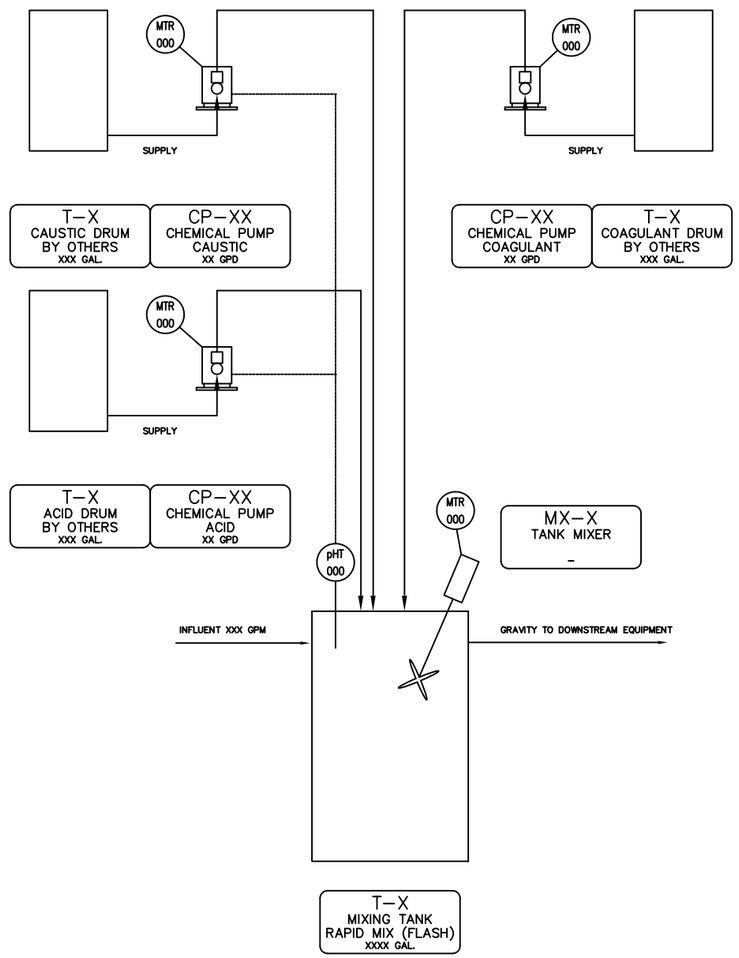

COMPONENT LEGEND

- BALL VALVE
- CHECK VALVE
- DIAPH VALVE
- BUTTERFLY VALVE
- ACTUATED BUTTERFLY VALVE
- ACTUATED 2–WAY BALL VALVE
- ACTUATED 3–WAY BALL VALVE
- FRL AIR FILTER–REGULATOR–LUBRICATOR
- TMR TIMER – ON/OFF

REV	DATE	CHANGES
X	XX–XX–XX	XX

HYDRO-FLO TECHNOLOGIES INC.
205 East Kehoe Boulevard–Suite 2, Carol Stream, IL. 60188

THIS DRAWING IS THE PROPERTY OF HYDRO–FLO TECHNOLOGIES, INC. AND IT IS LOANED UPON THE EXPRESS CONDITION THAT IT SHALL NOT BE COPIED OR REPRODUCED IN ANY MANNER, THAT IT SHALL NOT BE SUBMITTED TO OTHERS FOR EXAMINATION WITHOUT THE CONSENT OF THIS COMPANY, THAT IT SHALL NOT BE USED IN ANY OTHER WAY DETRIMENTAL TO THE INTERESTS OF THIS COMPANY AND THAT IT SHALL BE RETURNED UPON DEMAND.

CHEMICAL REACTION SYSTEM – TYPICAL
SYSTEM P & I D – TYPICAL

TOLERANCES	SCALE: NONE	DRAWN: XX	DATE: XX.XX.XX
UNLESS NOTED: ±3/16"		APPRVD: X	DATE: X
JOB	CUSTOMER	DRAWING NUMBER	SHT NO:
PROP	XX	XX–XXX PID	X OF X